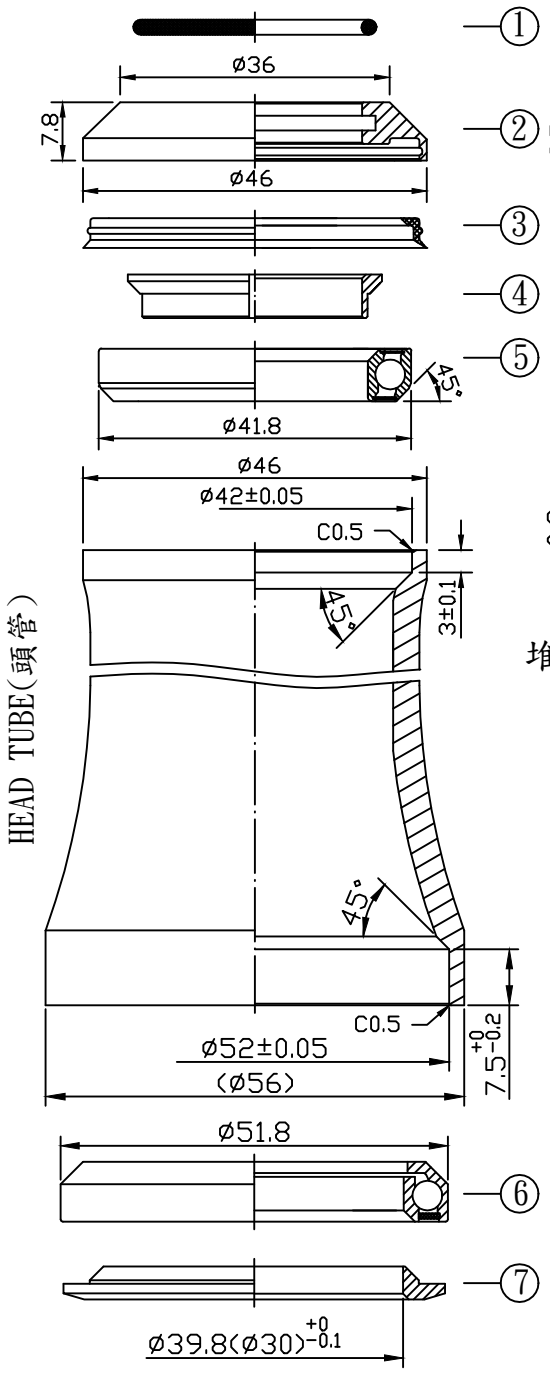

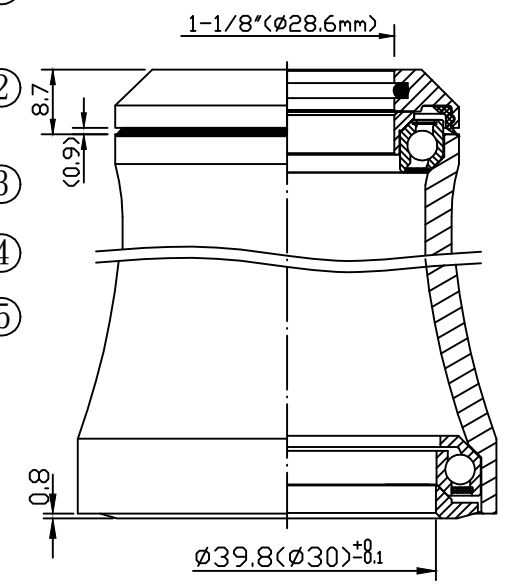

堆積高度(STACK HEIGHT)=9.5±1mm

可選配之上塞高度
(TOP COVER IS OPTIONAL)

型號(MODEL NO.): H373-B52

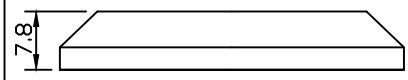

型號(MODEL NO.): H373M-B52

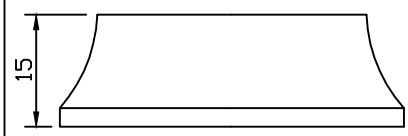

型號(MODEL NO.): H373H-B52

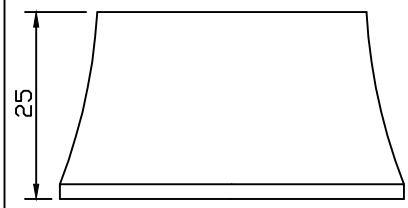

NO.	零件名稱 PART NAME	材質 MATERIAL	圖號 DRAWING NO.	台量 Q'TY	尺寸 DIM. DESCRIPTION
1	O形圈 O-RING	橡膠 NBR	120-8	1	ID28.5xø2
2	上塞 TOP COVER	鋁合金 6061/T6	51-3	1	1-1/8"
3	防塵蓋 UPPER WATER SEAL	橡膠 NBR	273-0	1	
4	鋁斜管 COMPRESSION RING	鋁合金 6061/T6	51-2	1	1-1/8"
5	密封式軸承 AC SEALED BEARING	軸承鋼 SUJ2	NHB-6B	1	OD41.8x45°x45°
6	特大型卡式軸承 SUPER OVERSIZE CARTRIDGE BALL BEARING	軸承鋼 SUJ2	CBB-518	1	OD51.8x45°x45°
7	鋁下塞 CROWN RACE	鋁合金 7075/T6	151-6 (153-6)	1	ø39.8(ø30)+0-0.1

- 全隱藏式車頭碗組
- 1.5"轉1-1/8" 前叉立管
- 車頭管外徑上小下大
  (建議車頭管外徑上半部46mm,下半部56mm)
- 鋁合金(6061)上塞
- 鋁合金(7075)下塞(內徑39.8mm或30mm)
- 上半部:斜接觸角度密封軸承
  下半部:特大型卡式軸承

- Full-integrated headset
- For 1-1/8" upper ,1.5" bottom steerer
- For different outerdiameter head tube
- 6061/T6 cnc machined top cover with seals
- 7075/T6 cnc machined crown race
  (inner diameter 39.8mm or 30mm)
- Upper:angular contact sealed bearing
  Lower:super oversize cartridge ball bearing

單位 UNIT	mm	比例 SCALE	1:1	日期 DRAWING DATE	2013.05.29	角法 VIEW	
型號 ITEM NO.	NECO 373-B52/373M-B52/373H-B52						版次(REV):A
品名 PART NAME	H373-B52/H373M-B52/H373H-B52 組立圖(Assembly Drawing)						
規格 DIMENSION	1-1/8"x42x52x39.8(1-1/8"x42x52x30)						
圖號 PART NO.	H373-B52(H373M-B52/H373H-B52)-組立圖-A						
NECO®	誌慶工業股份有限公司						